Installation Precautions:

1. Please read this manual before installing the system.
2. In order to avoid the risk of electric shock, please confirm to turn off the power before maintenance and installation.
3. The installation position of the track system must be more than 15cm away from flammable materials such as curtains.
4. Keep a distance of more than 1.5 meters from the floor.
5. Do not install and use the track system in a humid environment.
6. Do not install in a hidden area or through a wall.
7. In addition to track accessories and track lamps, do not install other electrical appliances on the track.
8. In order to ensure the safe operation of the track system, please do not install branch roads to avoid fire hazards.
9. Ask a professional electrician to check before connecting.
10. Please keep this manual for reference when replacing the track system.

Installation of rails

Depending on the environment, surface mounting or hanging installation can be selected.

Do not fasten the rails to the ceiling until all the electrical fittings are installed.

A. Surface mounting

① Use a hammer and screwdriver to knock open the track half-push hole

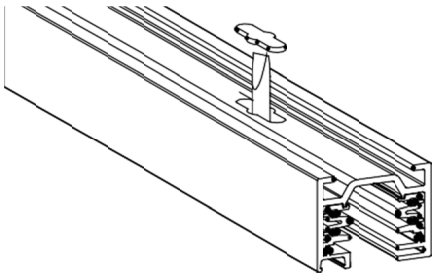

② Drill holes with a diameter of Ø18mm at the location of the ceiling callouts, Install with a butterfly nut.

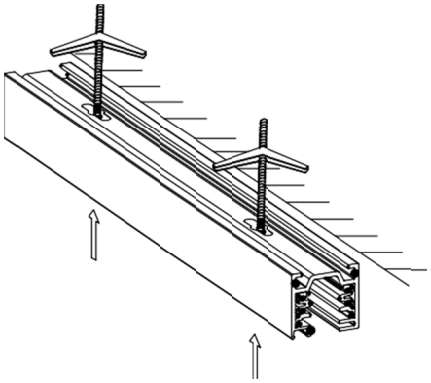

③ Lock the ceiling with the attached screws

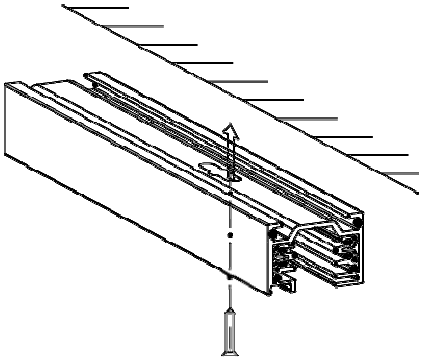

④ T-Bar installation

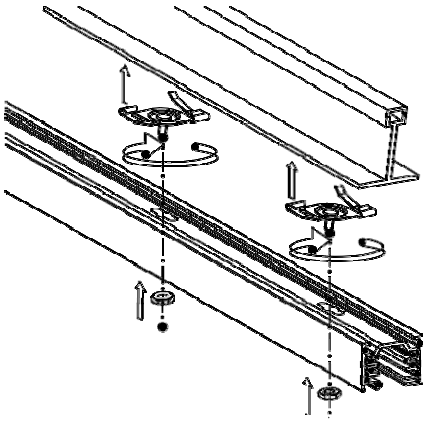

B、Suspension installation

① Boom suspension installation

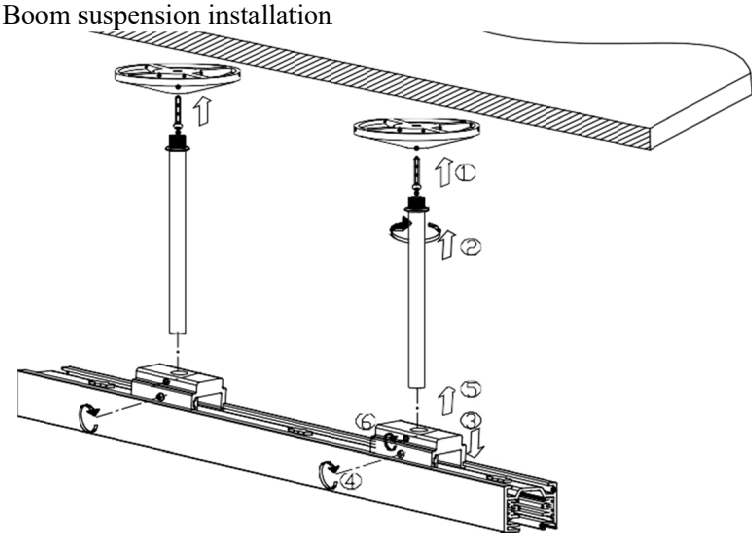

The boom is interconnected to adjust the height

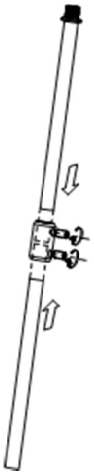

② Rope suspension installation

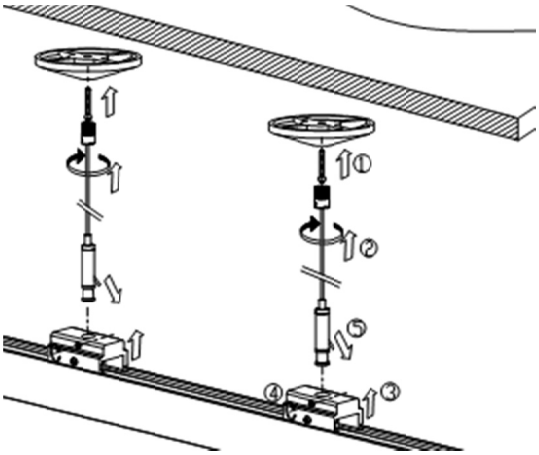

③

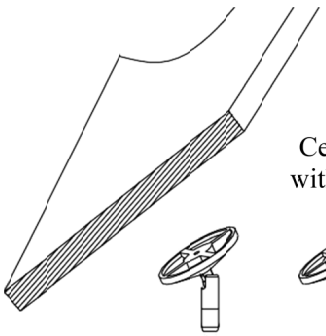

Ceiling hanging installation with sloping ceilings

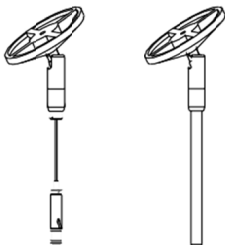

T-Bar pendant mounting

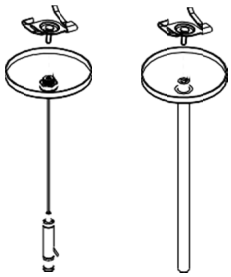

On-site cutting

① Cut the track to the right length (the ends should be flush)

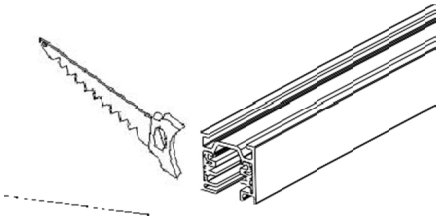

② Cut the boom to the right

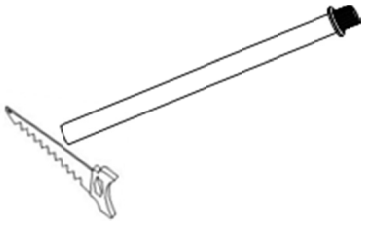

Fitting installation instructions

1. Please make sure to turn off all power before installation
2. Pay attention to the polarity connection indication of the track and joint.

Option A: End Power Supply (WEDL/WEDR)

①

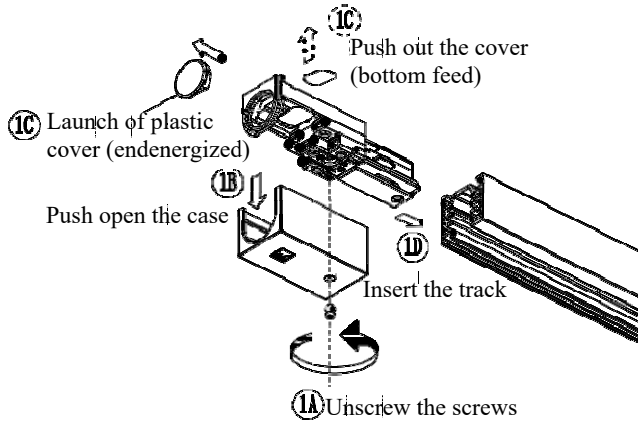

-Wire entry through the ends:
The end plastic cover must be removed and replaced with a rubber ring

-Wire entry through the bottom
The bottom cover must be pushed open.

②

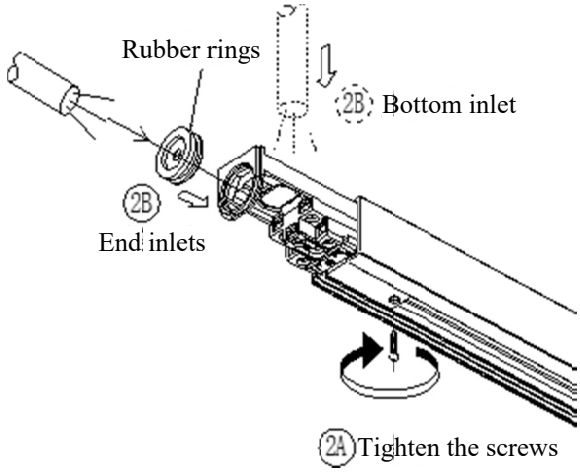

③

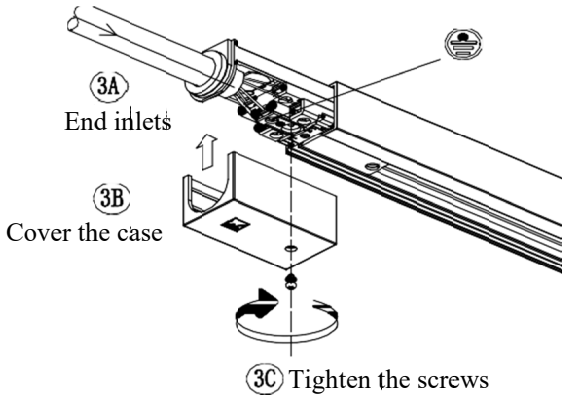

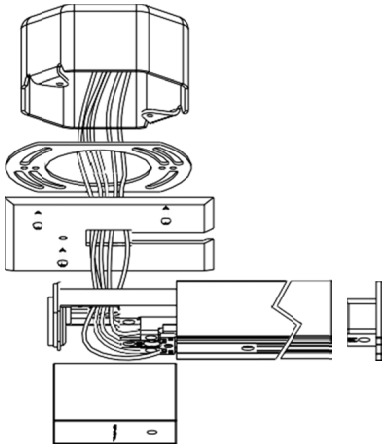

Option B: Intermediate Power Supply (WMD)

① Drilling holes in the middle of the track (diameter ¢16mm)

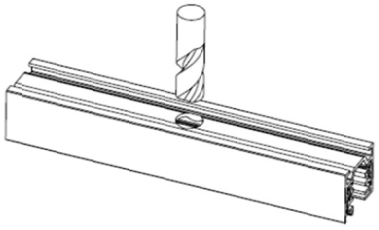

② To install the WMD, turn the knob 90 degrees clockwise

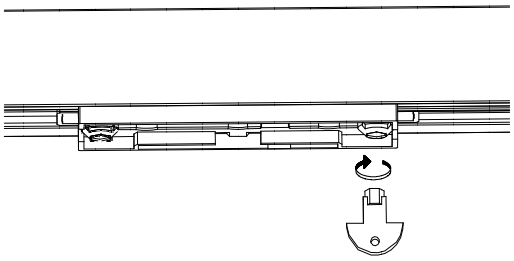

③Wiring, installing the bottom cover

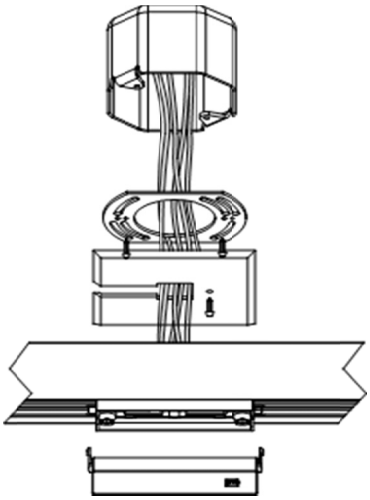

Maximum lifting weight

1. The maximum weight that the rail system can bear is shown in the figure below, which includes the weight of the entire rigging system.
2. A single adapter can withstand a maximum load of 10kg (the load is applied to the adapter according to the normal installation position of the luminaire).

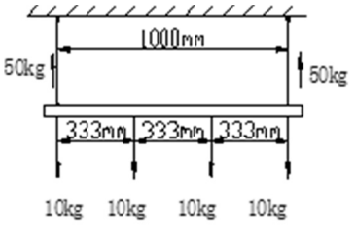

Suspension installation

Suspension installation

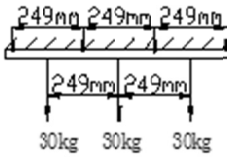

Surface mounted

Selection of wiring method

1. **Three circuit installation (non dimming/phase switching dimming/knob dimming using this wiring method)** circuit is shown in schematic A
   Input voltage：220-240V~50/60Hz
   Maximum current：16A
   Maximum Load：3840W
   Using wires: minimum of 5×2.5mm^2

220-240V~50/60Hz

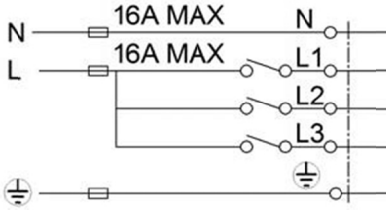

Diagram A

2. Single-loop installation (the dimming system adopts this wiring method:Example: 0-10V/DALI/DMX512, Note: The input voltage of DMX512 is input according to the actual voltage of the lamp, do not directly connect to 220V) circuit as shown in Figure B
   Input voltage:220-240V~50/60Hz
   Maximum current:16A
   Maximum Load:3840W
   Using wires（L/N/G）：minimum of 3×2.5mm^2
   Signal line: L1 to DIM+, L2 to DIM - (using wire: 2) × 1.5 mm^2)

220-240V~50/60Hz

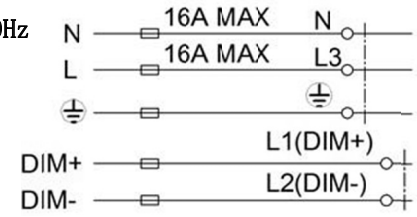

Diagram B

Wiring method 1: Three circuit track accessory wiring method (non dimming/phase switching dimming/knob dimming using three circuit wiring method)

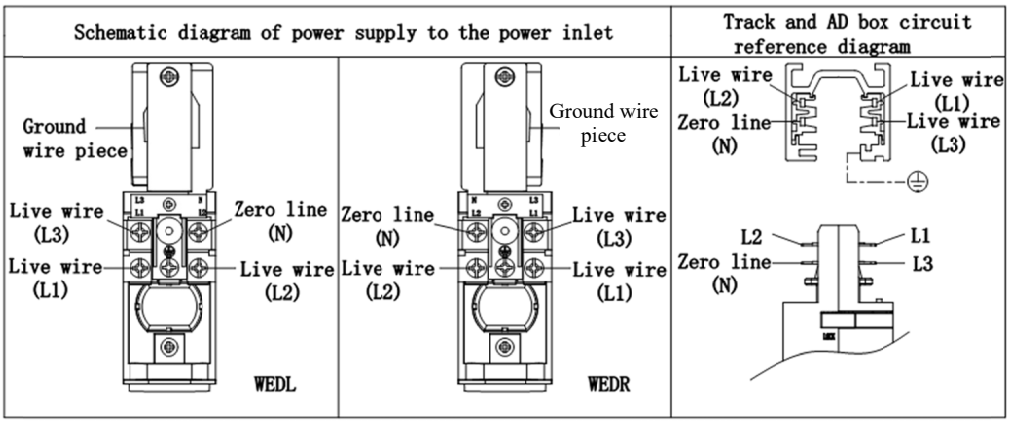

Rail power inlet connection MODEL:WEDL Rail power inlet connection MODEL:WEDR

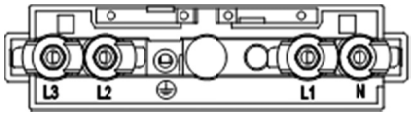

Middle power inlet connector MODEL:WMD

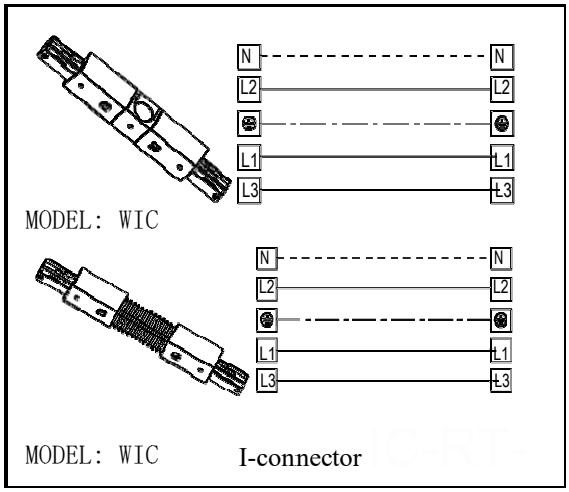

I-connector

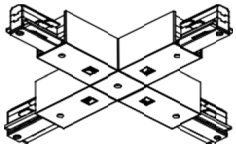

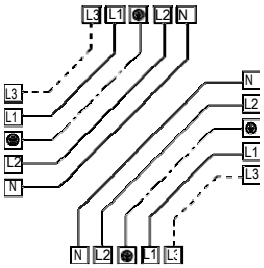

X-connector MODEL:WXC

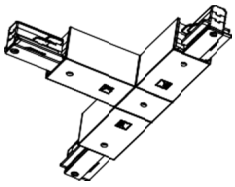

T-connector

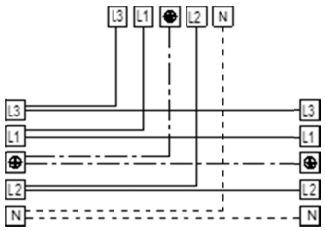

MODEL:WLTC
(Left side of the ground wire)

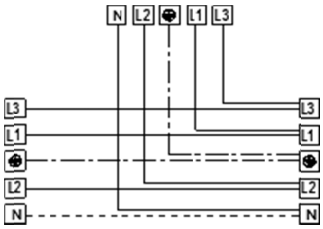

MODEL: WRTC
(Right side of ground wire)

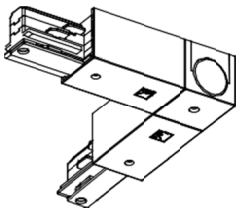

L-connector

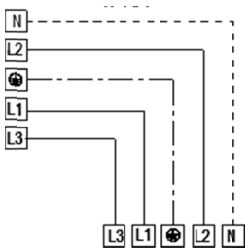

MODEL:WLTC (Ground inside)

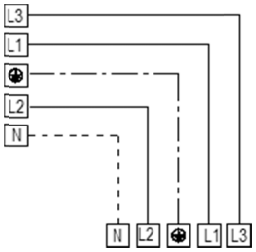

MODEL:WRTC (Ground outside)

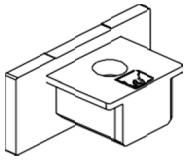

Tail plug MODEL:WEC

Wiring method 2: Wiring method for dimming in a single loop system
(For example, 0-10V/DALI/DMX512, etc. Note: The input voltage of DMX512 is based on the actual voltage of the lamp)

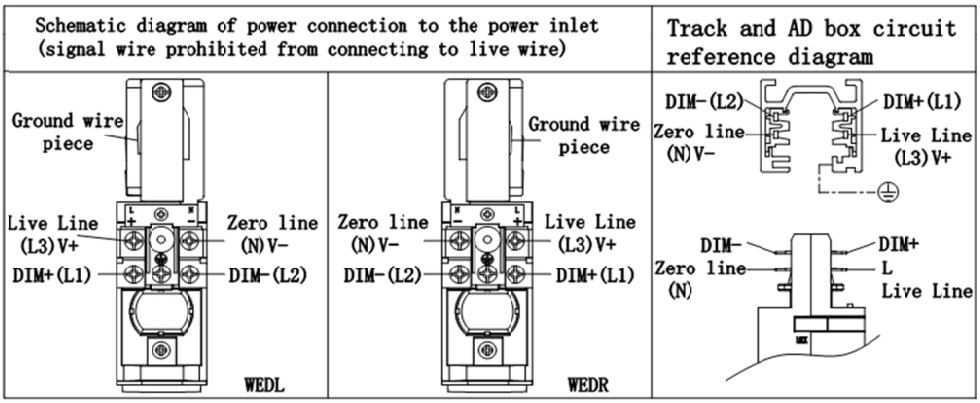

Attention: The left image V+/V - is suitable for low-voltage lamps with DXM512 dimming function and input voltage of 12V/24V/36V/48V. Such lamps should be wired according to the actual voltage, please do not directly connect to 220V!

Power on MODEL:WEDL Power on MODEL:WEDR

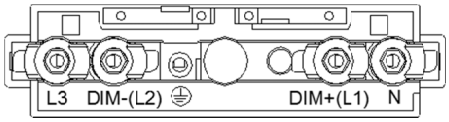

Middle power inlet connector MODEL:WMD

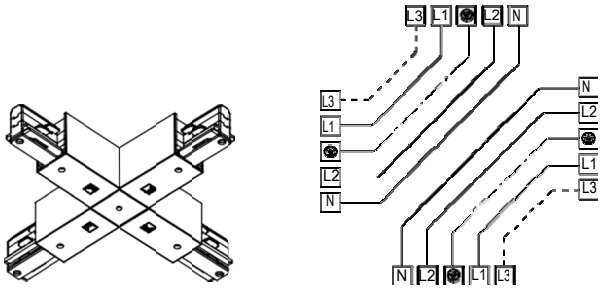

X-connector MODEL:WXC

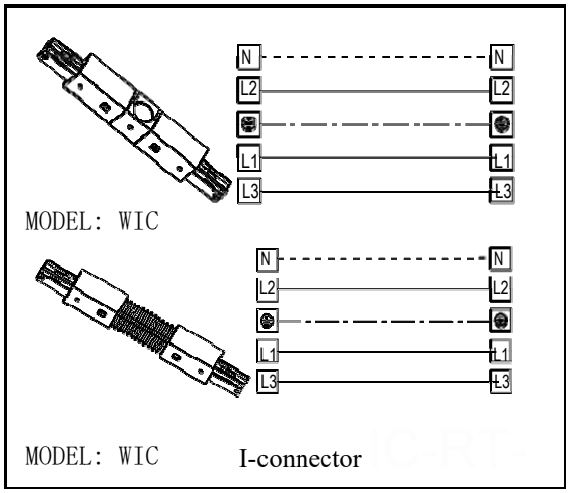

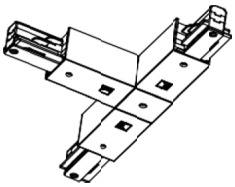

T-connector

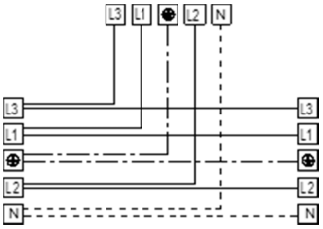

MODEL:WLTC
(Left side of ground wire)

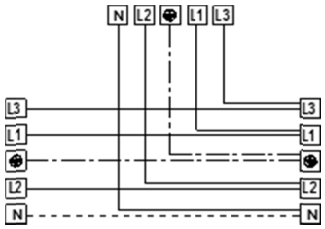

MODEL: WRTC
(Right side of ground wire)

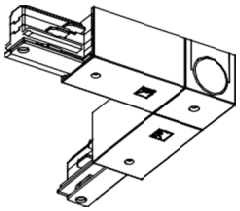

L-connector

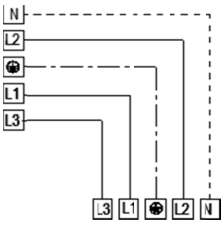

MODEL:WLTC(Ground inside)

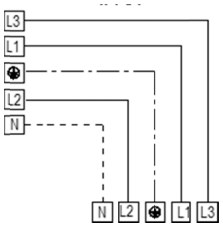

MODEL: WRTC(Ground outside)

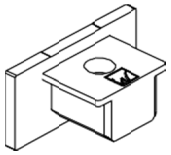

Tail plug MODEL: WEC

WARNING: Make sure all power is off before installing the system!
The end of the track must be fitted with a tail cap to prevent electric shock!
Ensuring the electrical, mechanical and thermal compatibility between the rail system and the luminaires to which it is connected is our shared responsibility!

Straight Configuration

A	WEDR	Live end connector (right)
B	WIC	I power connector
C	WPC	I connector
D	WEC	End cap

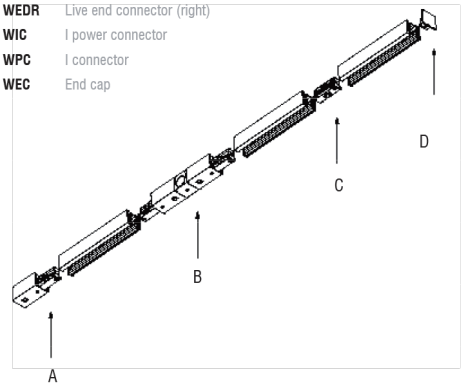

Flexible Configuration

A	WEDR	Live end connector (right)
B	WEDL	Live end connector (left)
C	WFC	Flexible connector
D	WEC	End cap

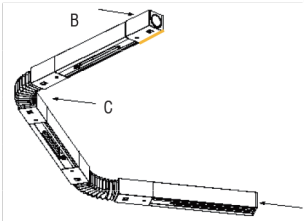

Horizontal Ceiling Mount

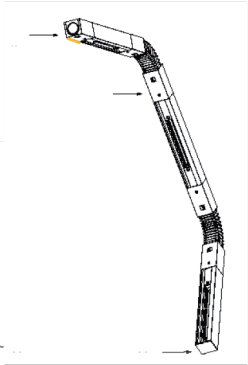

Vertical Wall-to-Ceiling Mount

Grid Configuration

A	WLLC	L Connector Left
B	WLTC	T Connector Left
C	WRTC	T Connector Right
D	WXC	X Connector

= Indicates Electrical Continuity

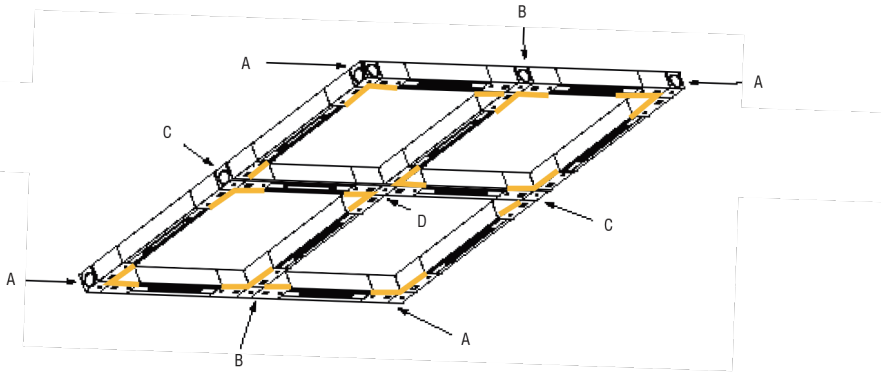

Cable Suspension Mount

Use one support for every 4 feet

A	WMFP	Flexible Stem kit with power feed
B	WMED	Live end suspension mount
C	WEDL	Live end connector (left)
D	WMST-X	Cable suspension kit
E	WMT	Suspension hanger clip
F	WMST-TB	T bar cable suspension kit
G	WMST-XS	Sloped ceiling cable kit
H	WMLC	L connector suspension mount
I	WLLC	L connector left
J	WEC	End cap

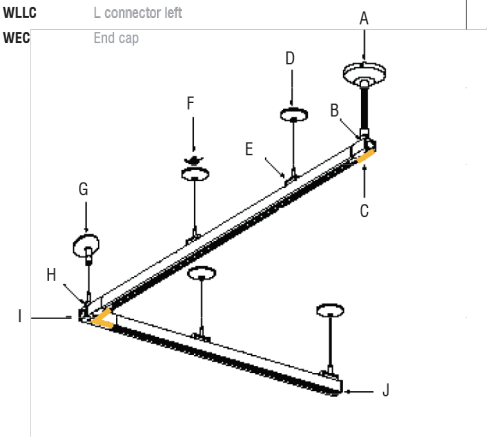

Stem Suspension Mount

A	WMSP	Stem kit with power feed
B	WMED	Live end suspension mount
C	WEDR	Live end connector (right)
D	WMT-XS	Sloped ceiling stem kit
E	WMT	Suspension hanger clip
F	WMT-TB	T bar stem kit
G	WMT-X	Stem kit
H	WMLC	L connector suspension mount
I	WLLC	L connector left
J	WEC	End cap

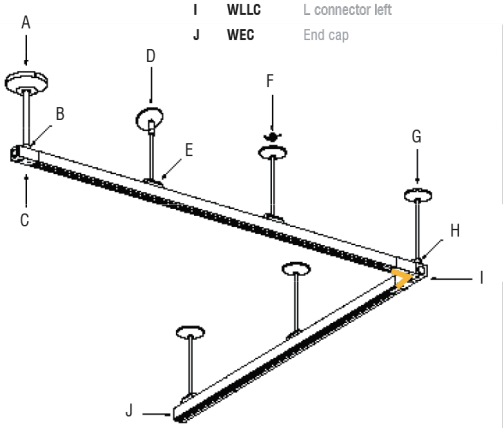

Schematic diagram of the connection and installation of the rail system

Licensed by "WAC" trademark holder - WAC LIGHTING, USA
Chinese Marketing Headquarters : WAC Lighting (Shanghai) Co, Ltd.
Address : 14,Lane 299, Bi Sheng Road, Shanghai 201204,China
China factory : Manufactured WAC Lighting (Dongguan) Co, Ltd.
Address : 390, Qingfeng Road, Qingxi Town, Dngguan, Guangdong. Postal code: 523653