I. Installation Precaution：

1. Please read all installation precautions carefully.
2. For indoor installation only (not for use in humid environments
3. The installation and testing of the luminaires must be operated by professionally qualified personnel.
4. Please make sure to turn off the power before installation to prevent electric shock.
5. Please keep the instruction manual for reference.

II. Luminaire Size

Length L*Width W*Height H

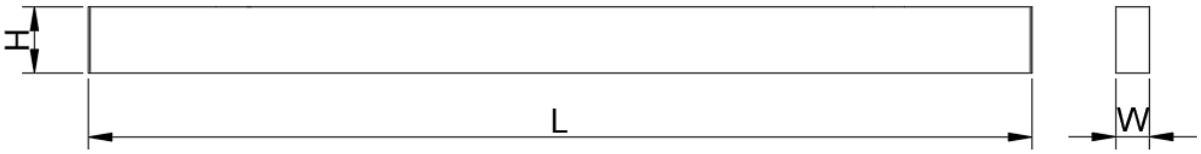

III. Lamp Structure and Accessories: Self-tapping screws.

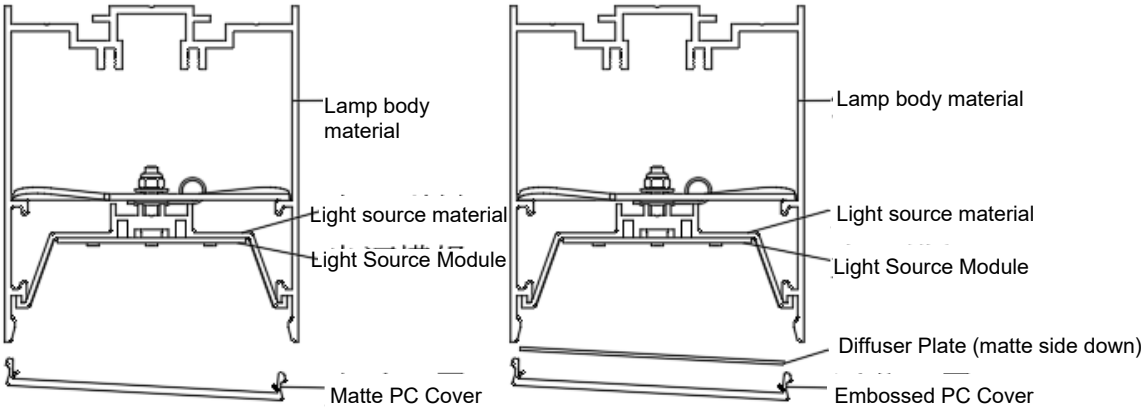

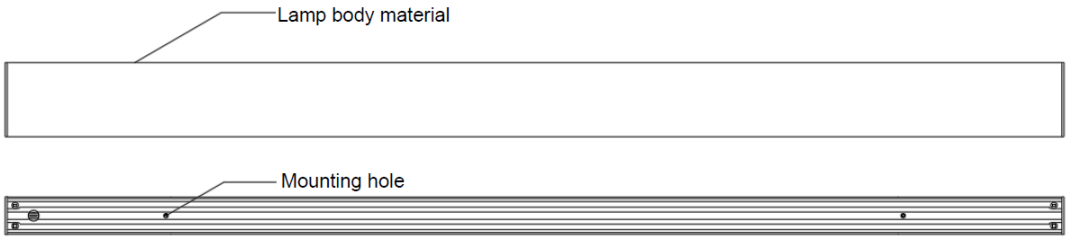

Luminaire Top Surface Structure

IV. Installation Methods and Procedures:

1. Remove the paddles at both ends and the mask in turn before installing the luminaire, unlock the rotating screws with a screwdriver. Remove the light source module and light source material.

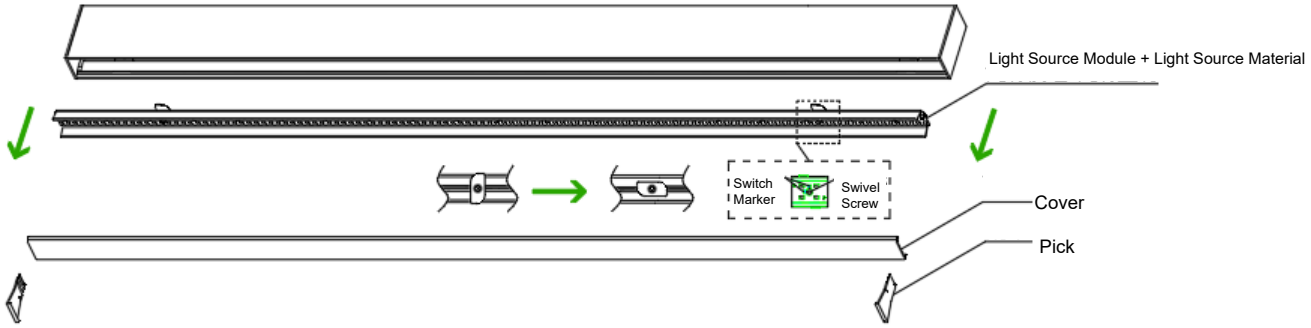

2. Connect the power input wire of the fixture to the power supply, L is the fire wire, N is the zero wire, ⏚ is the ground wire, and the input voltage is AC 220V~240V 50/60Hz. Align the mounting screws with the mounting holes of the fixture, secure it with a screwdriver or a power tool, and fixed the luminaire on the ceiling.

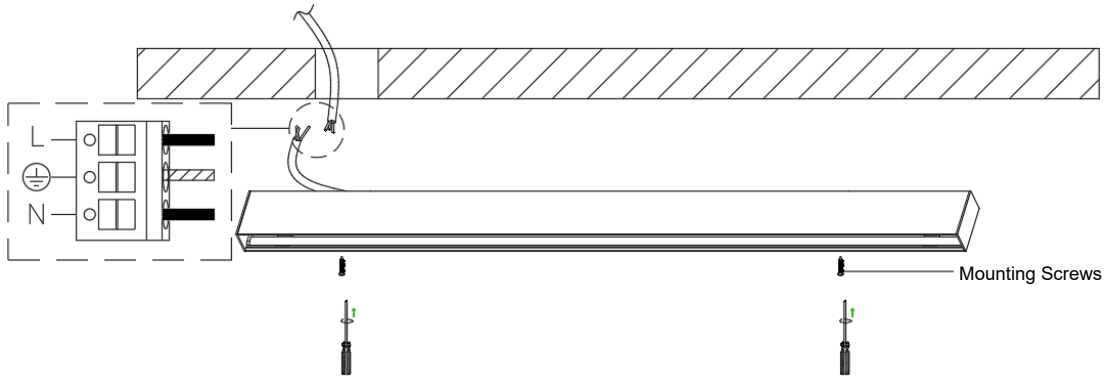

3. Install the light source module and light source profile into the light body, then lock the swivel screws with a screwdriver, and install the mask and end cap into the light body in order.

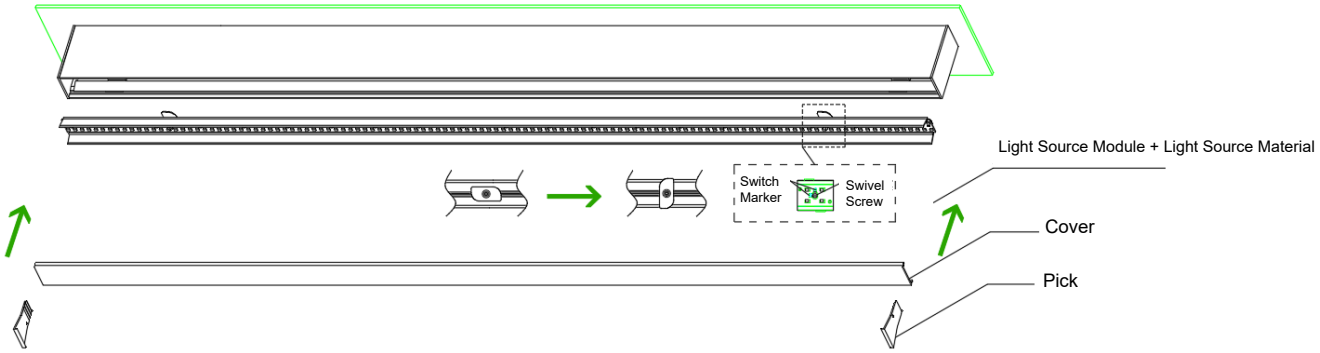
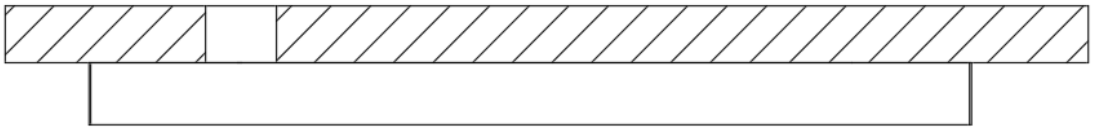
4. Light up the fixture to complete the last step of fixture installation.