WAC ARCHITECTURAL

# Trinity

## Outdoor Chain Lights

AN01 | ATN03 | ATN06

Fixture Type: _____

Project: _____

Catalog#: _____

Location: _____

### LINE DRAWING

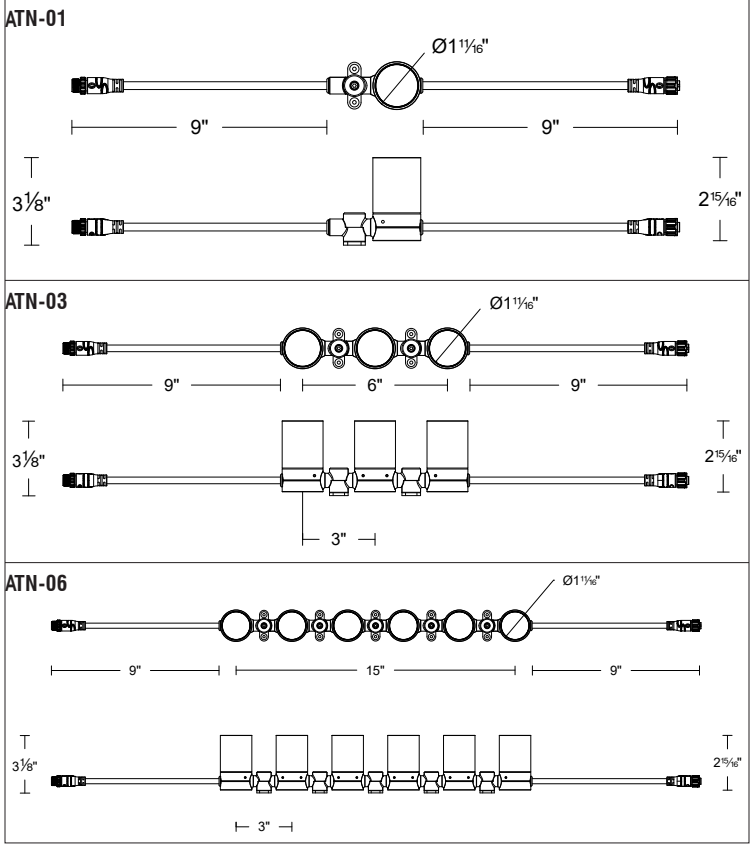


### PRODUCT DESCRIPTION

Trinity is a professional LED flexible linear light designed by WAC for high-end outdoor lighting applications. With its compact form and all-glass surface design, Trinity offers a clean, elegant aesthetic suited for modern architectural environments. Its multi-directional adjustable angles accommodate a variety of applications. A wide range of accessories is available to support diverse installation requirements and lighting solutions.

### SPECIFICATIONS

| | |
|---|---|
| **Construction:** | Durable die-cast aluminum construction |
| **Mounting:** | Outdoor installation |
| **Light Source:** | 3-step Mac Adam Ellipse<br>Rated life of 50,000 hours at L70 |
| **Input:** | 24 VDC, Class II |
| **Power:** | 6W (TN01), 16W (TN03), 33W (TN06) |
| **Maximum Delivered Intensity:** | Up to 780 cd per head |
| **Maximum Delivered Output:** | Up to 100 lm per head |
| **Operating Temperature:** | -4°F to 122°F (-20°C to 50°C) |
| **Standards:** | UL & cUL Wet location listed, IP65 |
| **Warranty:** | 5 year WAC Lighting guaranteed warranty |

### BEAM ANGLES

| Model | Size | Beam | *Lumens | *CBCP |
|---|---|---|---|---|
| ATN | 01 | **S** 15° | 124 | 783 |
| | | **N** 25° | 130 | 497 |
| | | **W** 60° | 91 | 74 |
| | | **E** 35°x45° | 100 | 168 |
| | 03 | **S** 15° | 379 | 2,233 |
| | | **N** 25° | 392 | 1,539 |
| | | **W** 60° | 273 | 223 |
| | | **E** 35°x45° | 297 | 505 |
| | 06 | **S** 15° | 758 | 4,466 |
| | | **N** 25° | 783 | 3,077 |
| | | **W** 60° | 547 | 445 |
| | | **E** 35°x45° | 595 | 1,012 |

*Lumens and CBCP are reference values for 3000K Color Temperature.
Refer to Multiplier Table in Performance Data to determine other outputs.




WAC Group Headquarters
44 Harbor Park Drive
Port Washington, NY 11050

WAC Architectural
Phone (800) 526.2588
Fax (800) 526.2585





WAC Group retains the right to modify the design of our products at any time as part of the company's continuous improvement program.

# Trinity

## Outdoor Chain Lights

AN01 | ATN03 | ATN06

Fixture Type: _____

Project: _____

Catalog#: _____

Location: _____

## ORDERING INFORMATION

**CONFIGURATION TABLE**

| Model & Power | Color Temperature & CRI | Dimming | Beam Angle | Housing Finish |
|---|---|---|---|---|
| **ATN01** | **RGBW30** - 3000K - 80 CRI | **D** - DMX512-A | **S** - Spot 15° | **BK** - BLACK |
| **ATN03** | **RGBW40** - 4000K - 80 CRI | | **N** - Narrow Flood 25° | |
| **ATN06** | **RGBW57** - 5700K - 80 CRI | | **W** - Wide Flood 60° | |
| | | | **E** - Elongating 35° x 45° | |

**ATN__-RGBW__D-_-BK**

Example:ATN03-RGBW40D-W-BK

**ACCESSORIES**

| | | | |
|---|---|---|---|
| **WL-LW01-BK** | *Window Light Lead In Cable - 1ft* | **ATN-SHR-BK** | *Trinity Asymmetric Shroud - Black* |
| **WL-LW05-BK** | *Window Light Lead In Cable - 5ft* | **ATN-SNT-BK** | *Trinity Symmetric Snoot - Black* |
| **WL-LW10-BK** | *Window Light Lead In Cable - 10ft* | **ATN-SMB-BK** | *Trinity Surface Mount Bracket - Black* |
| **WL-LW20-BK** | *Window Light Lead In Cable - 20ft* | **ATN-SMBS-BK** | *Trinity Surface Mount Bracket Spacer - Black* |
| **WL-LW25-BK** | *Window Light Lead In Cable - 25ft* | **ATN-SMA-BK** | *Trinity Stake Mount Adapter 9" Stake - Black* |
| **WL-JC01-BK** | *Window Light Jumper Cable - 1ft* | **ATN-TMB-BK** | *Trinity Strap Mount Bracket - Black* |
| **WL-JC05-BK** | *Window Light Jumper Cable - 5ft* | **ATN-STRAP-BK** | *Trinity Strap - Black* |
| **WL-JC10-BK** | *Window Light Jumper Cable - 10ft* | **ATN-HCL-BK** | *Trinity Honeycomb Louver - Black* |
| **WL-JC20-BK** | *Window Light Jumper Cable - 20ft* | **ATN-LEN-BEL-H** | *Trinity Horizontal Elongating Beam Lens* |
| **WL-JC25-BK** | *Window Light Jumper Cable - 25ft* | **ATN-LEN-BEL-V** | *Trinity Vertical Elongating Beam Lens* |
| **WL-JCY01-BK** | *Window Light 3 Way Jumper Cable - 1ft* | **ATN-LEN-BEL-U** | *Trinity Elongating Beam Lens* |
| **WL-JCY05-BK** | *Window Light 3 Way Jumper Cable - 5ft* | **9000-ST9-BZ** | *Landscape Stake - Bronze* |
| **WL-JCY10-BK** | *Window Light 3 Way Jumper Cable - 10ft* | | |
| **WL-JCY20-BK** | *Window Light 3 Way Jumper Cable - 20ft* | | |
| **WL-JCY25-BK** | *Window Light 3 Way Jumper Cable - 25ft* | | |
| **WL-JC-ENDCAP-BK** | *Window Light Cable End Cap* | | |



WAC Group Headquarters
44 Harbor Park Drive
Port Washington, NY 11050

WAC Architectural
Phone (800) 526.2588
Fax (800) 526.2585



WAC Group retains the right to modify the design of our products at any time as part of the company's continuous improvement program.

# Trinity

## Outdoor Chain Lights

AN01 | ATN03 | ATN06

Fixture Type: _____

Project: _____

Catalog#: _____

Location: _____

## FEATURES

| | |
|---|---|
| **Optics:**<br>• Full RGBW range available at three different CCTs of 3000K, 4000K, and 5700K | **Construction:**<br>• Durable die-cast aluminum construction |
| **LED:**<br>• High output LED with a 3-step Mac Adam ellipse<br>• Rated operational life of 50,000 hours at L70 (LED maintains 70% of its initial delivered lumens when brand new for 50,000 hours of use.) | **Trim and Reflector:**<br>• Beam angles of 15°, 25°, 60°, and an elongating 35° x 45° are available |
| **Electrical:**<br>• Trinity is a low voltage fixture with an operating voltage of 24 VDC | **Installation:**<br>• Trinity is suitable for outdoor installations and is IP65 wet location listed |
| **Dimming:**<br>• DMX512-A is integrated for dimming control | **Warranty:**<br>• WAC Architectural limited warranty up to 5 years<br>• Full warranty found at: waclighting.com/warranty |
| **Notes:**<br>• The Black finish is electrostatically powder coated | |



WAC Group Headquarters
44 Harbor Park Drive
Port Washington, NY 11050

WAC Architectural
Phone (800) 526.2588
Fax (800) 526.2585



WAC Group retains the right to modify the design of our products at any time as part of the company's continuous improvement program.

Fixture Type: _____

Project: _____

Catalog#: _____

Location: _____

## PERFORMANCE DATA

### Polar Candela Distribution Charts

Samples shown from a fixture set to 3000K.

**Spot Beam: 15°**

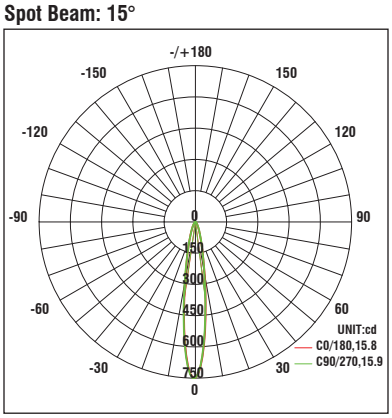


**Elongating Beam: 35° x 45°**

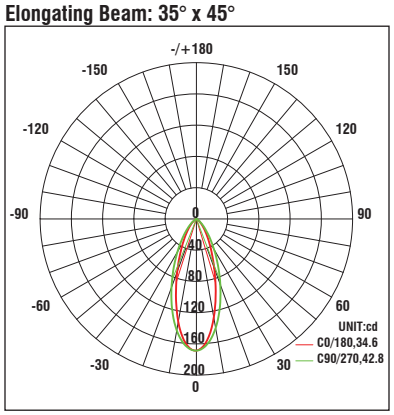


**Narrow Flood Beam: 25°**

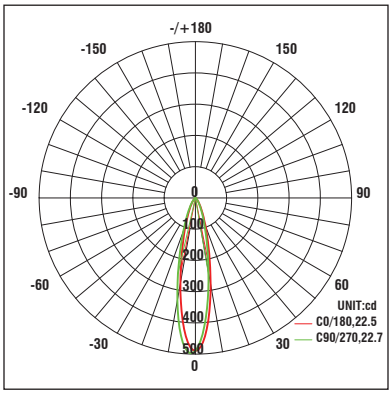


**Wide Flood Beam: 60°**

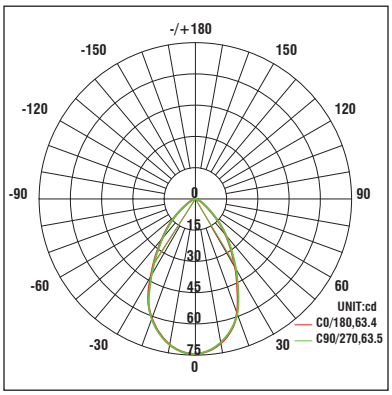




WAC Group Headquarters
44 Harbor Park Drive
Port Washington, NY 11050

WAC Architectural
Phone (800) 526.2588
Fax (800) 526.2585



WAC Group retains the right to modify the design of our products at any time as part of the company's continuous improvement program.

Fixture Type: _____

Project: _____

Catalog#: _____

Location: _____

## PERFORMANCE DATA

### Unified Glare Rating (UGR) Table

Samples shown from a fixture set to 3000K.

| Round Fixture | Angle | UGR Range |
|---|---|---|
| Spot | 15° | ≤17 |
| Narrow Flood | 25° | ≤16 |
| Wide Flood | 60° | ≤22 |
| Elongating | 35° x 45° | ≤20 |

### Lumens and CBCP Multiplier Table

Use the below table to determine lumens and CBCP values for the combinations of power, color temperature, and CRI values.

| Color Temperature | | | | |
|---|---|---|---|---|
| 2700K | 3000K | 3500K | 4000K | 5000K |
| 0.96 | 1.00 | 1.02 | 1.07 | 1.12 |



WAC Group Headquarters
44 Harbor Park Drive
Port Washington, NY 11050

WAC Architectural
Phone (800) 526.2588
Fax (800) 526.2585



WAC Group retains the right to modify the design of our products at any time as part of the company's continuous improvement program.

# Trinity

## Outdoor Chain Lights

AN01 | ATN03 | ATN06

Fixture Type: _____

Project: _____

Catalog#: _____

Location: _____

## DIMENSIONAL DIAGRAMS

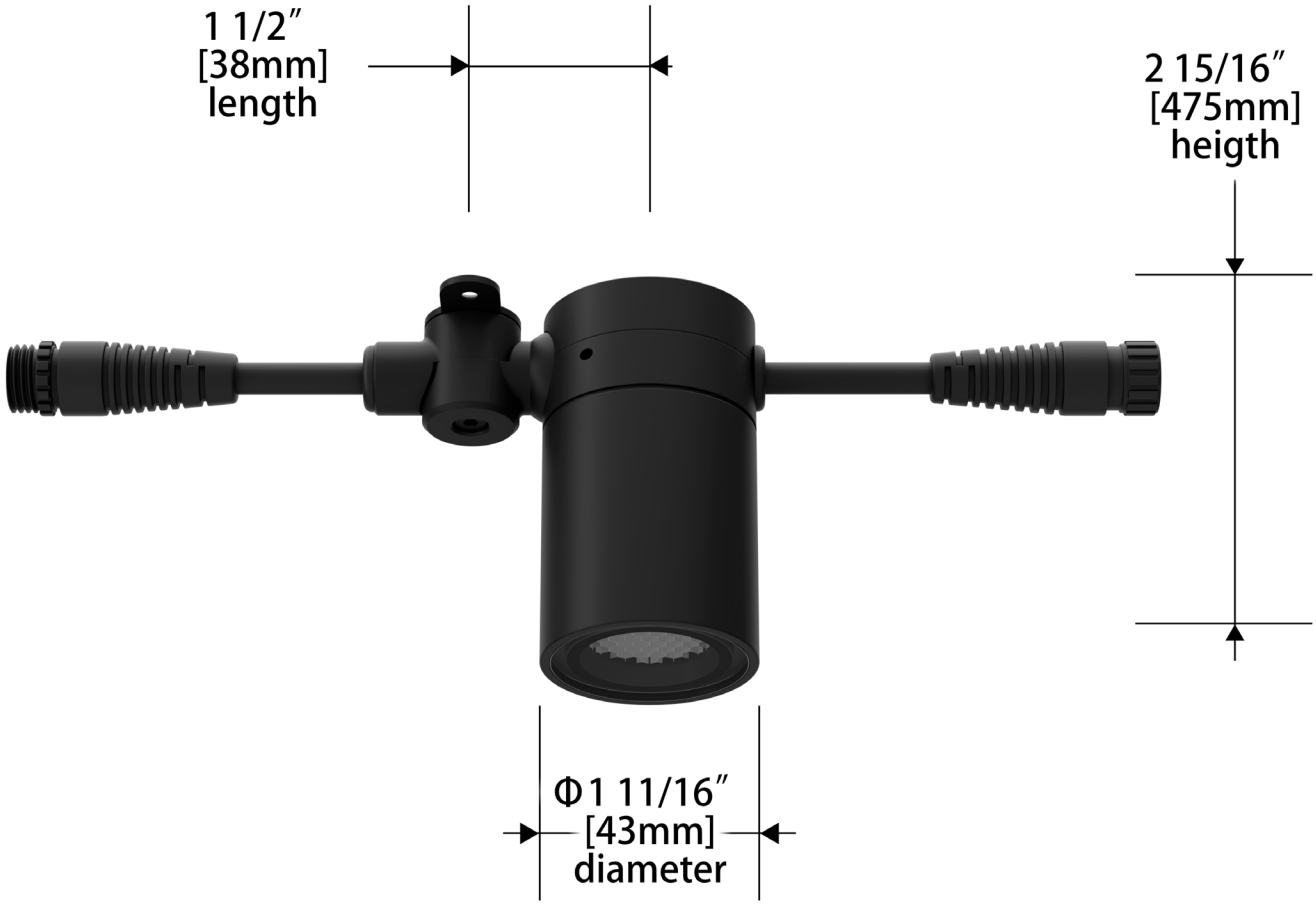




WAC Group Headquarters
44 Harbor Park Drive
Port Washington, NY 11050

WAC Architectural
Phone (800) 526.2588
Fax (800) 526.2585





WAC Group retains the right to modify the design of our products at any time as part of the company's continuous improvement program.

# Trinity

## Outdoor Chain Lights

AN01 | ATN03 | ATN06

Fixture Type: _____

Project: _____

Catalog#: _____

Location: _____

## WIRING DIAGRAM

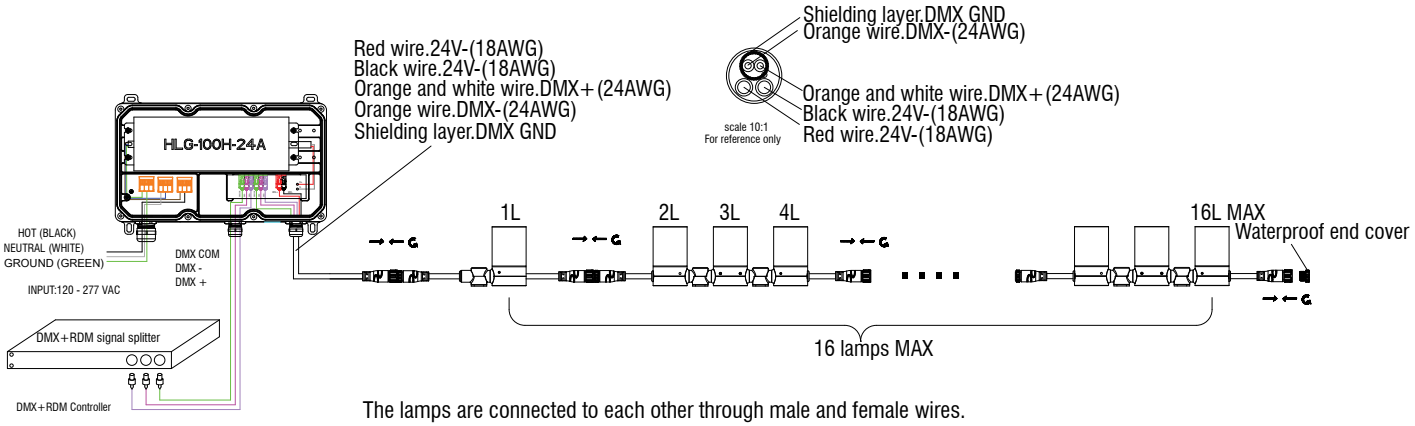


The lamps are connected to each other through male and female wires.
One drive with 16 lamps

**Please connect the wires according to the labels on the wires**
**Direct connection to high voltage is prohibited!**



WAC Group Headquarters
44 Harbor Park Drive
Port Washington, NY 11050

WAC Architectural
Phone (800) 526.2588
Fax (800) 526.2585



WAC GROUP

WAC Group retains the right to modify the design of our products at any time as part of the company's continuous improvement program.